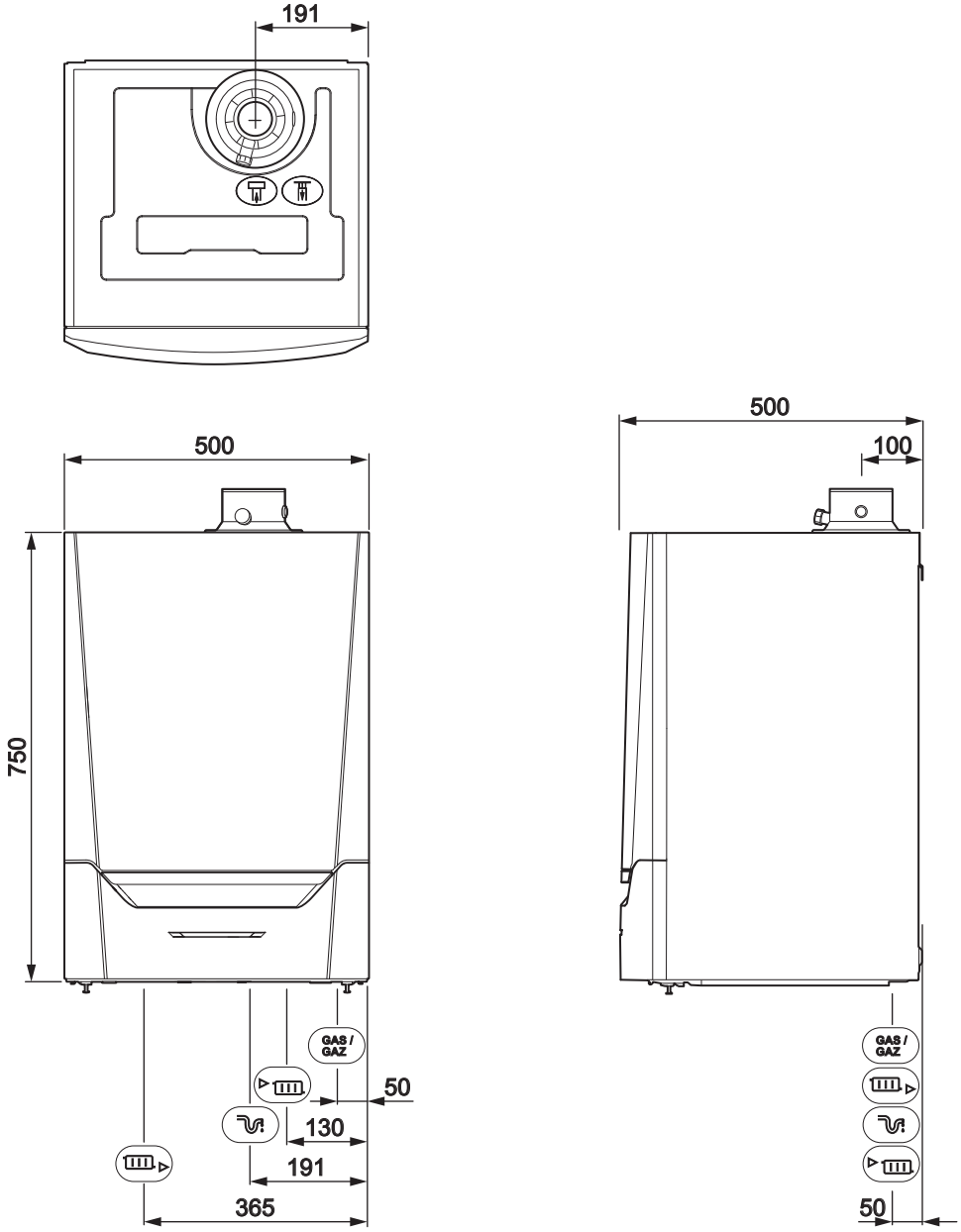

AD-4100113-01